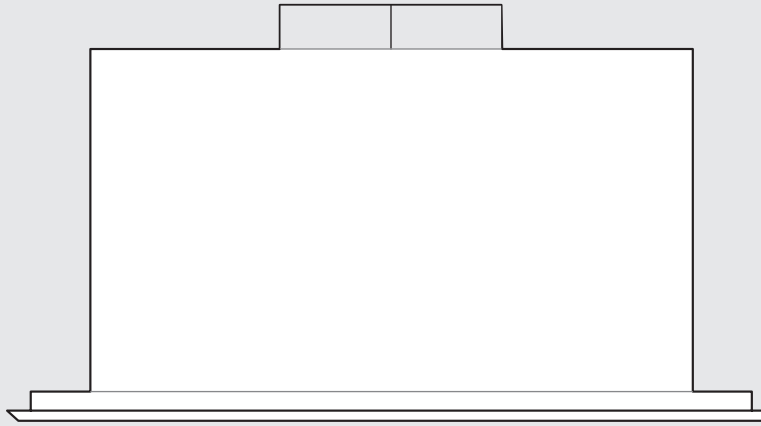

Range Hood

USER MANUAL

52T01-ET23
90T01-ET23

Warning notices: Before using this product, please read this manual carefully and keep it for future reference.
The design and specifications are subject to change without prior notice for product improvement.
Consult with your dealer or manufacturer for details.
The diagram above is just for reference. Please take the appearance of the actual product as the standard.

THANK YOU LETTER

Thank you for choosing Midea! Before using your new Midea product, please read this manual thoroughly to ensure that you know how to operate the features and functions that your new appliance offers in a safe way.

CONTENTS

THANK YOU LETTER 01

SAFETY INSTRUCTIONS 02

SPECIFICATIONS 04

PRODUCT OVERVIEW 05

PRODUCT INSTALLATION 07

OPERATION INSTRUCTIONS 09

CLEANING AND MAINTENANCE 10

TROUBLESHOOTING 12

TRADEMARKS, COPYRIGHTS AND LEGAL STATEMENT 13

DISPOSAL AND RECYCLING 13

DATA PROTECTION NOTICE 14

SAFETY INSTRUCTIONS

Intended Use

The following safety guidelines are intended to prevent unforeseen risks or damage from unsafe or incorrect operation of the appliance. Please check the packaging and appliance on arrival to make sure everything is intact to ensure safe operation. If you find any damage, please contact the retailer or dealer. Please note modifications or alterations to the appliance are not allowed for your safety concern. Unintended use may cause hazards and loss of warranty claims.

Explanation of Symbols



Danger
This symbol indicates that there are dangers to the life and health of persons due to extremely flammable gas.



Warning of electrical voltage
This symbol indicates that there is a danger to life and health of persons due to voltage.



Warning
The signal word indicates a hazard with a medium level of risk which, if not avoided, may result in death or serious injury.



Caution
The signal word indicates a hazard with a low degree of risk which, if not avoided, may result in minor or moderate injury.



Attention
The signal word indicates important information (e.g. damage to property), but not danger.



Observe instructions
This symbol indicates that a service technician should only operate and maintain this appliance in accordance with the operating instructions.

Read these operating instructions carefully and attentively before using/commissioning the unit and keep them in the immediate vicinity of the installation site or unit for later use!

Contact an authorized service technician for repair or maintenance of this unit.
The installation of this appliance must comply with national building or installation laws and regulations. Installation must be carried out by authorized personnel or specialists. Failure to follow these guidelines could result in hazardous conditions.

⚠ WARNING

- The instructions for Use apply to several versions of this appliance. Accordingly, you may find descriptions of individual features that do not apply to your specific appliance.
- This appliance is not intended for use by persons (including children) with reduced physical, sensory or mental capabilities, or lack of experience and knowledge, unless they have been given supervision or instruction concerning use of the appliance by a person responsible for their safety.
- Children should be supervised to ensure that they do not play with the appliance.
- This appliance can be used by children aged from 8 years and above and persons with reduced physical, sensory or mental capabilities or lack of experience and knowledge if they have been given supervision or instruction concerning use of the appliance in a safe way and understand the hazards involved. (EN 60335-1 & EN 60335-2-31)
- Children shall not play with the appliance. (EN 60335-1 & EN 60335-2-31)
- Cleaning and user maintenance shall not be made by children without supervision. (EN 60335-1 & EN 60335-2-31)
- If the supply cord is damaged, it must be replaced by the manufacturer or its service agent or a similarly qualified person in orderto avoid a hazard.
- This appliance incorporates an earth connection for functional purposes only.
- There shall be adequate ventilation of the room when the range hood is used at the same time as appliances burning gas or other fuels (not applicable to appliances that only discharge the air back into the room).
- There is a fire risk if cleaning is not carried out in accordance with the instructions;
- Do not flame under the range hood.
- CAUTION: Accessible parts may become hot when used with cooking appliances.
- The air must not be discharged into a flue that is used for exhausting fumes from appliances burning gas or other fuels (not applicable to appliances that only discharge the air back into the room).
- The minimum distance between the supporting surface for the cooking vessels on the hob and the lowest part of the range hood. This distance shall be at least 65 cm. If the instructions for installation specify a greater distance, this has to be taken into account. The distance of 65 cm can be reduced for non-combustible parts of range hoods, except grease filters, or parts operating at safety extra low voltage, provided these parts do not give access to live parts if deformed.
- Regulations concerning the discharge of air have to be fulfilled.
- The appliance uses 4 hob elements at most.
- The manufacturer will not be held liable for any damages resulting from incorrect or improper installation.
- Check that the mains voltage corresponds to that indicated on the rating plate fixed to the hood.
- For Class I appliances,check that the domestic power supply guarantees adequate earthing.
- Connect the extractor to the exhaust flue through a pipe of minimum diameter 120mm.

⚠ CAUTION

- If the instructions for installation for the gas hob specify a greater distance specified above, this has to be taken into account.
- The extractor hood has been designed exclusively for domestic use to eliminate kitchen smells.
- Never use the hood for purposes other than for which it has been designed.
- Never leave high naked flames under the hood when it is in operation.
- Adjust the flame intensity to direct it onto the bottom of the pan only, making sure that it does not engulf the sides.
- Deep fat fryers must be continuously monitored during use: overheated oil can burst into flames.
- Extension sockets are forbidden.
- Please cut off the power before maintenance.
- This appliance has been designed for home use only, and may cause danger if used in special occasions.

ATTENTION

- The range hood and its filter should be cleaned regularly according to the instruction.
- Switch off or unplug the appliance from the mains supply before carrying out any maintenance work.
- Clean the hood using a damp cloth and a neutral liquid detergent.

SPECIFICATIONS

Product Model	**52T01-ET23/90T01-ET23**
Voltage	220V-240V~/50Hz
Rated Power	293 W
Lighting Power	1.5 W × 2
Motor Power	290 W
Diameter of air tube	150 mm
Air flow	800m^3/h
Noise	⩽72 dB(A)

The air flow parameter is tested under conditions of 120V~60Hz (230V~50Hz) when the voltage is 110-127V~ 60Hz (220-240V~ 50/60Hz) and without carbon filters.

Electrical diagram see label on main body of the actual product.

PRODUCT OVERVIEW

Measurement

unit:mm

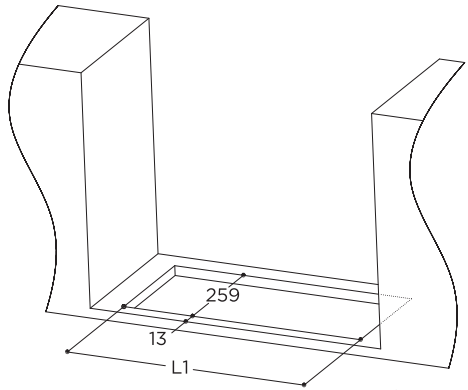

A	520	700	900
L1	497	677	865

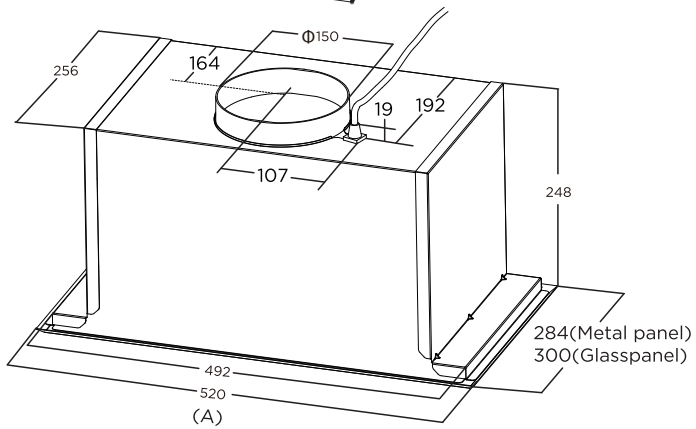

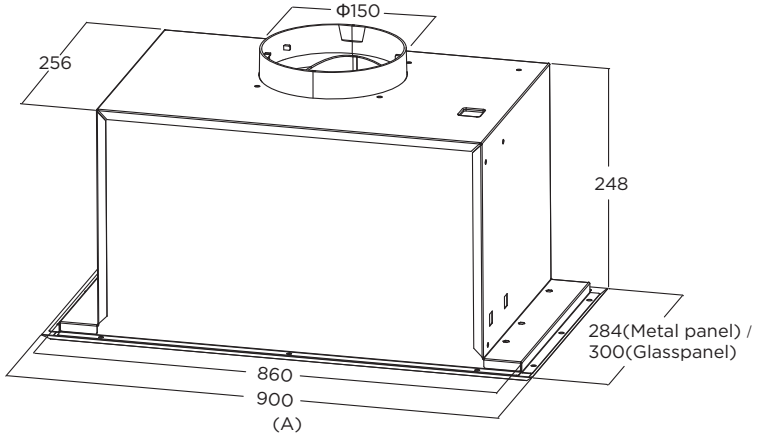

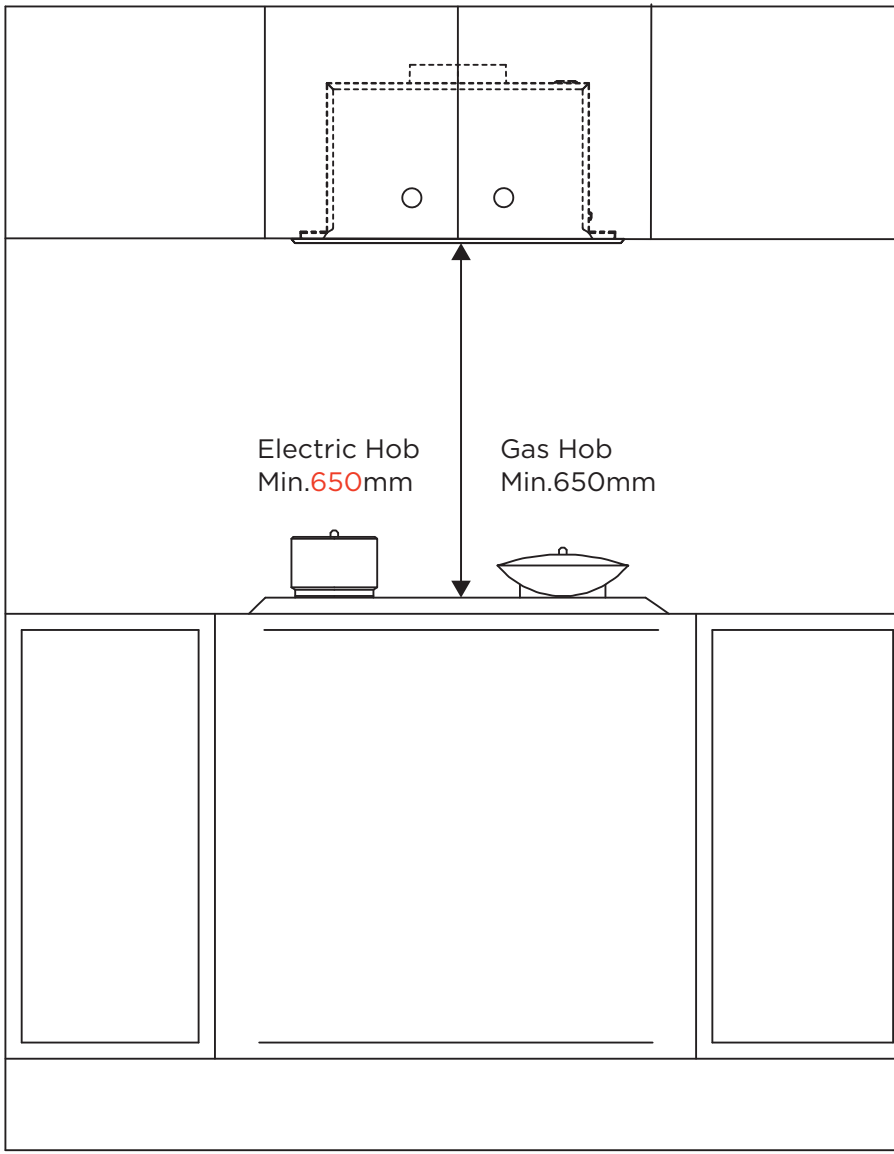
Electric Hob
Min.650mm
Gas Hob
Min.650mm

PRODUCT INSTALLATION

Installation

Here two venting modes, extraction-air mode and recirculation mode, before installing select one mode.

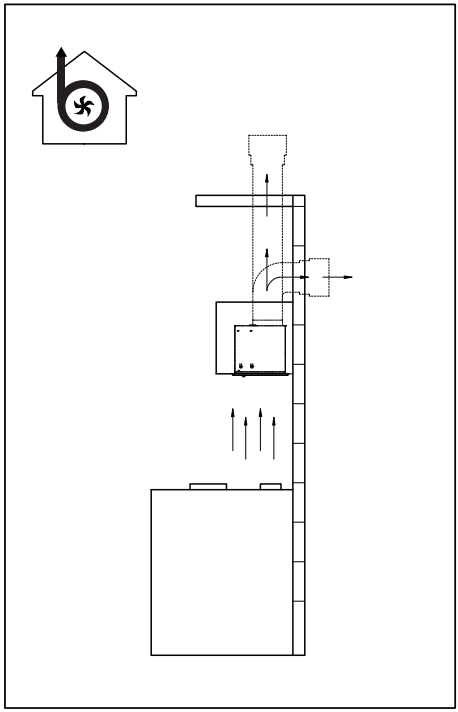

Extraction-air mode

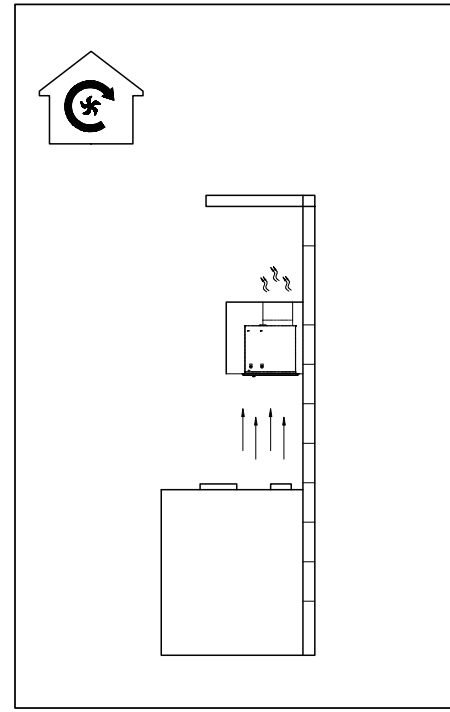

Recirculation mode

With easy installation module installed by user

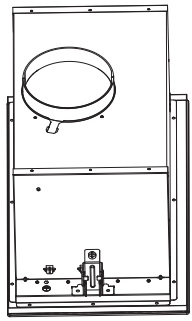

1. Fasten the 2 easy installation module on each side of the box with 4 screws(4x10) .

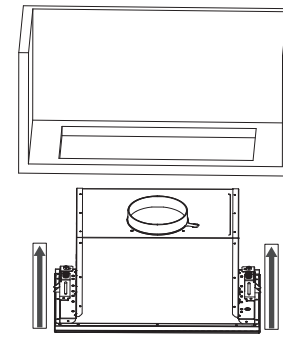

2. Push the machine into the hole on the cabinet.

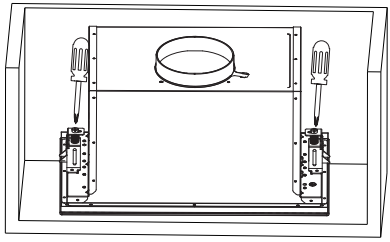

3. Fasten the 2 screws on the top of the easy installation module.

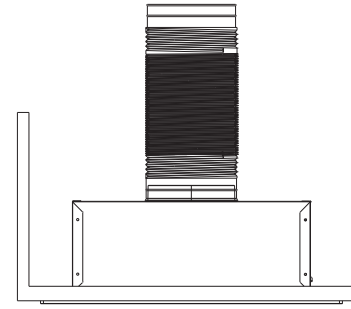

4. Install the air outlet pipe(optional).

Speed Adjustment. See Below Fig(For Some Models)

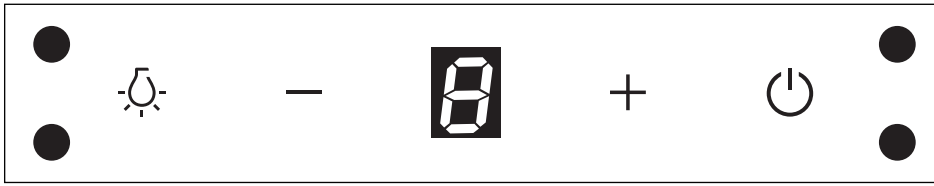

Button	Function	Remarks
	Turns the lighting system on or off.	Button on.
—	Decrease the motor speed.	When ⏻ + — are on.
	Display fan gear "1、2、3".	When the fan is running.
	Display "0".	Delayed shutdown mode, or standby mode.
+	Increase the motor speed.	When ⏻ + + are on.
	Turn the Motor ON.	When ⏻ is off.
	Automatic shutdown after 3 minutes.	When ⏻ is on.
	Turn the Motor OFF.	When ⏻ is flashing.
	Turn the Motor and Lights ON.	When ⏻ is off.
	Change the motor speed circularly (1—2—3—1—2—3).	When ⏻ is on.
	Enter delayed shutdown mode(Automatic shutdown after 3 minutes).	When ⏻ is on.
	Turn the Motor and Lights OFF.	When ⏻ is flashing.

CLEANING AND MAINTENANCE

Cleaning Of The Filter

- Removing the metal filter according to Installation (page 9).
- Put it into a dishwasher with detergent, set the temperature below 60 degrees.
- Please do not use abrasive detergent for it will damage the hood.
- Make sure that the hood is shut off before cleaning.

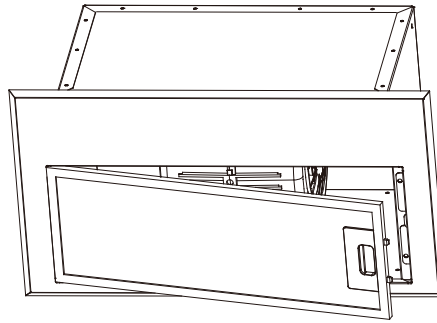

Changing The Filter

- Remove the metal filter according to Installation.
- Remove the saturated Activated Charcoal Filters(optional), as indicated.
- Fit the new Charcoal Filters, as indicated.
- Replace the Metal grease Filter according to Installtion.

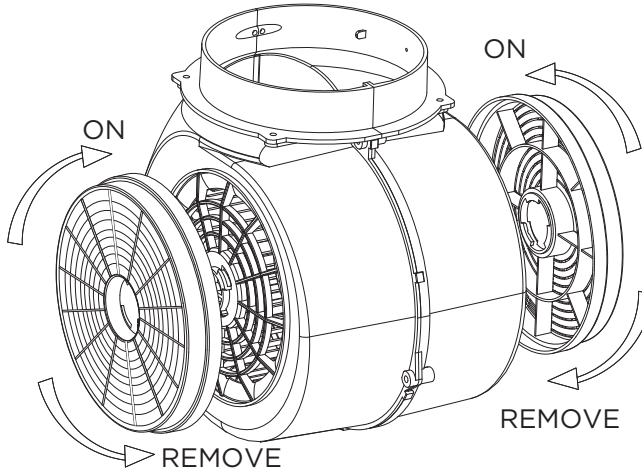

Replacing The Lamp

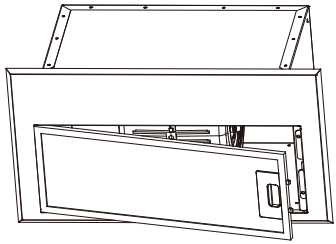

Press the lock catch of metal Filter, remove the Filter.

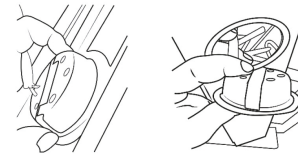

Push the lamp from inside, to remove the Lamp.

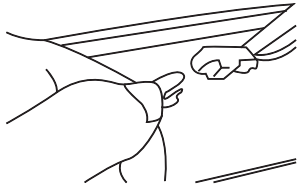

Disconnect the wires to the Lamp.
Connect the wires of the new Lamp.
Push the new lamp and fix it to the hole.

	Max Power	Voltage	Picture	Lamp Cap	ILCOS D code
Round/ Diameter: 70mm	1.5W	DC 12 V		——	DSR-1.5-S-70

TROUBLESHOOTING

Problem	Possible reason	Solution
Light on, but motor does not work	• The blades are blocked.	Check the blades
	• The capacitor is damaged.	Replace capacitor.
	• The motor is damaged.	Replace motor.
	• The internal wiring of motor is cut off/disconnected. An unpleasant smell may be produced.	Replace motor.
Both light andmotor do notwork	Apart from the above mentioned, check the following:	
	• Light damaged.	Replace lights.
	• Power cord loose.	Connect the wires as the electric diagram.
Oil leakage	• Outlet and the air ventilation entrance are not tightly sealed.	Take down the outlet and seal with glue.
Vibration	• The blade, if damaged, can cause vibrating.	Replace the blade.
	• The motor is not tightly fastened.	Fasten the motor tightly.
	• The range hood is not tightly fixed.	Fixed the range hood tightly.
Insufficient suction	• The distance between the range hood and the cooker top is too large.	Readjust the distance.
	• Too much ventilation from open doors or windows.	Choose a new place to install the appliance or close some doors / windows.
The machine inclines	• The fixing screws are not tight enough.	Tighten the fixing screw and make it horizontal.
	• The hanging screws are not tightenough	Tighten the hanging screw and make it horizontal.

TRADEMARKS, COPYRIGHTS AND LEGAL STATEMENT

Midea logo, word marks, trade name, trade dress and all versions thereof are valuable assets of Midea Group and/or its affiliates ("Midea"), to which Midea owns trademarks, copyrights and other intellectual property rights, and all goodwill derived from using any part of an Midea trademark. Use of Midea trademark for commercial purposes without the prior written consent of Midea may constitute trademark infringement or unfair competition in violation of relevant laws.

This manual is created by Midea and Midea reserves all copyrights thereof. No entity or individual may use, duplicate, modify, distribute in whole or in part this manual, or bundle or sell with other products without the prior written consent of Midea.

All the described functions and instructions were up to date at the time of printing this manual. However, the actual product may vary due to improved functions and designs.

DISPOSAL AND RECYCLING

Important instructions for environment

Compliance with the WEEE Directive and Disposing of the Waster Product:
This product complies with EU WEEE Directive (2012/19/EU). This product bears a classification symbol for waster electrical and electronic equipment (WEEE).

This symbol indicates that this product shall not be disposed with other household wastes at the end of its service life. Used device must be returned to official collection point for recycling of electrical electronic devices. To find these collection systems please contact to your local authorities or retailer where the product was purchased. Each household performs important role in recovering and recycling of old appliance. Appropriate disposal of used appliance helps prevent potential negative consequences for the environment and human health.



Compliance with RoHS Directive

The product you have purchased complies with EU RoHS Directive (2011/65/EU). It does not contain harmful and prohibited materials specified in the Directive.

Package information

Packaging materials of the product are manufactured from recyclable materials in accordance with our National Environment Regulations. Do not dispose of the packaging materials together with the domestic or other wastes. Take them to the packaging material collection points designated by the local authorities.

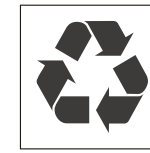

DATA PROTECTION NOTICE

For the provision of the services agreed with the customer,
we agree to comply without restriction with all stipulations of applicable data protection law, in line with agreed countries within which services to the customer will be delivered, as well as, where applicable, the EU General Data Protection Regulation (GDPR).

Generally, our data processing is to fulfil our obligation under contract with you and for product safety reasons, to safeguard your rights in connection with warranty and product registration questions. In some cases, but only if appropriate data protection is ensured, personal data might be transferred to recipients located outside of the European Economic Area.

Further information are provided on request. You can contact our Data Protection Officer via **MideaDPO@midea.com**. To exercise your rights such as right to object your personal date being processed for direct marketing purposes, please contact us via **MideaDPO@midea.com**. To find further information, please follow the QR Code.

Midea

make yourself at home

www.midea.com