ASSEMBLY INSTRUCTIONS

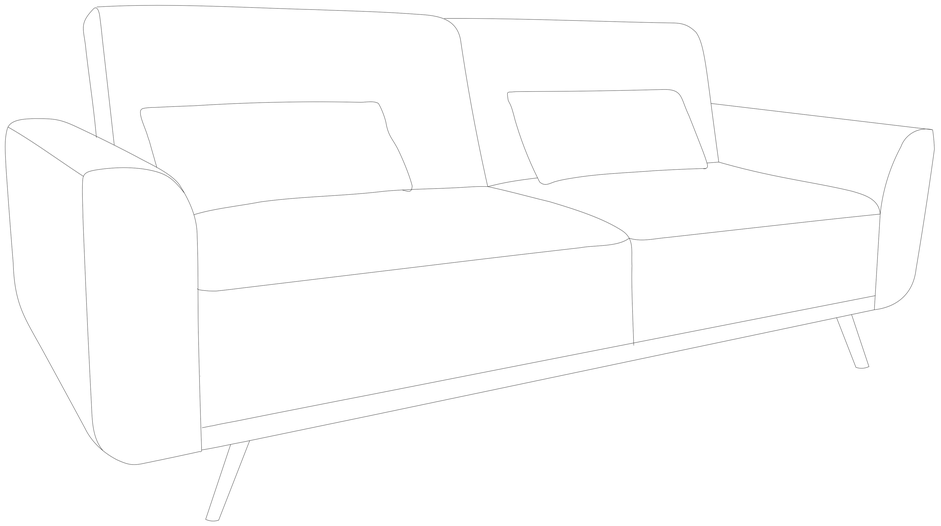

HARDWARE AND PARTS

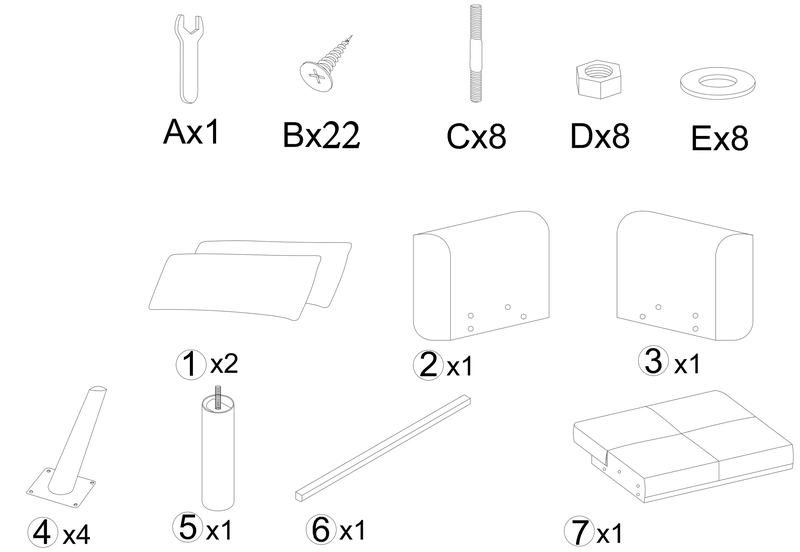

Step 1

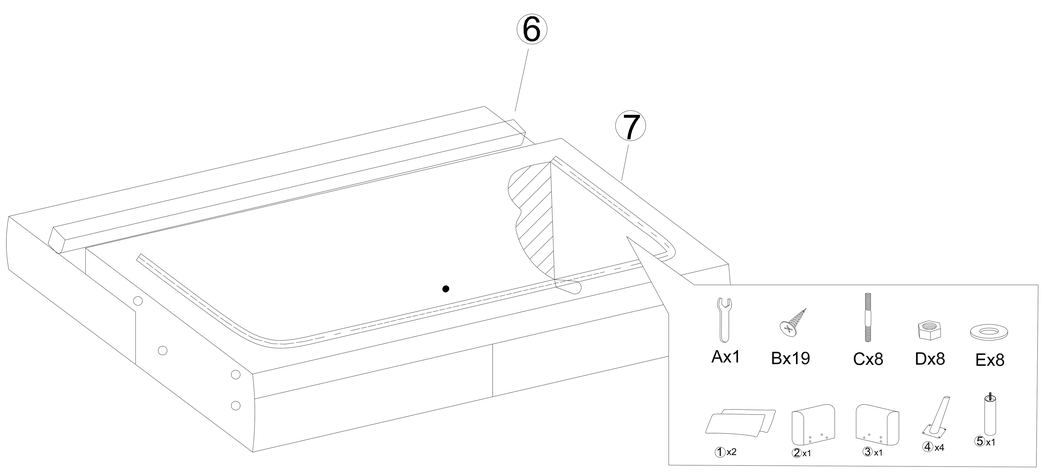

Step 2

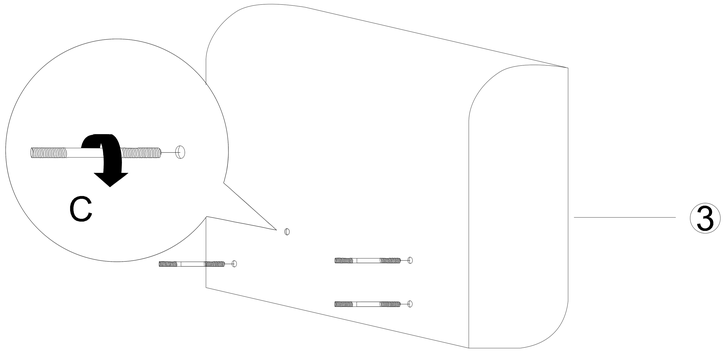

Step 3

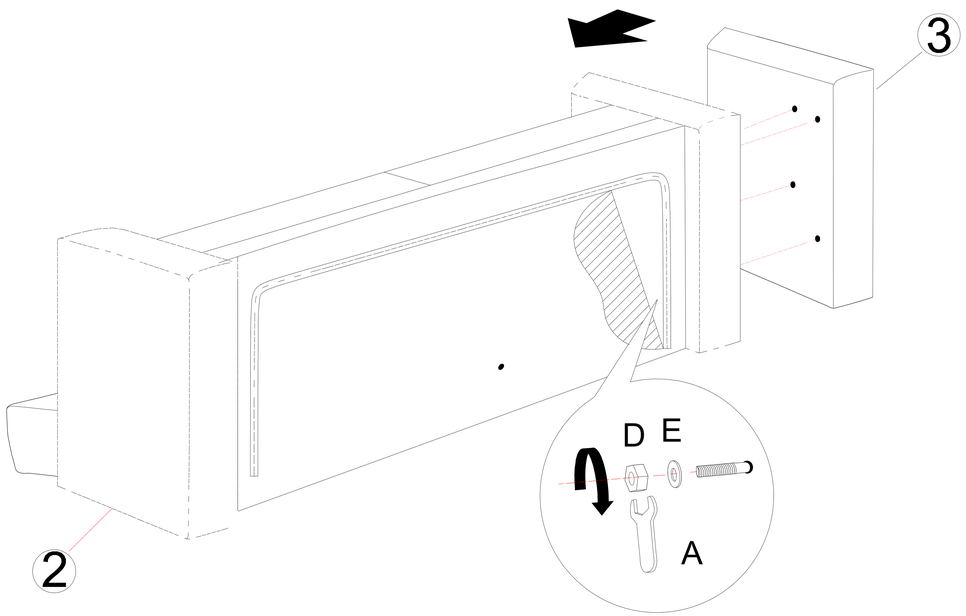
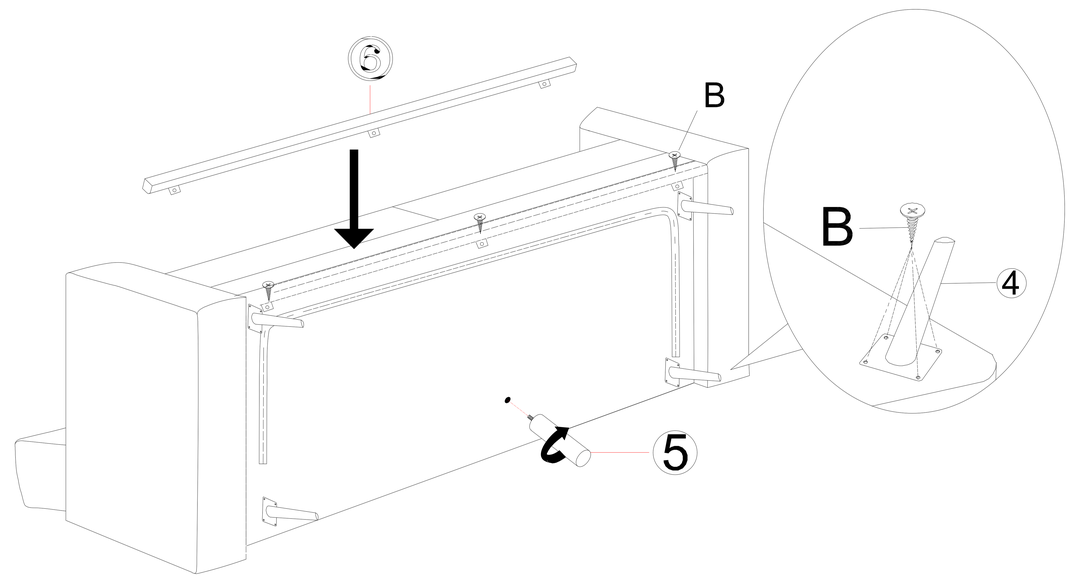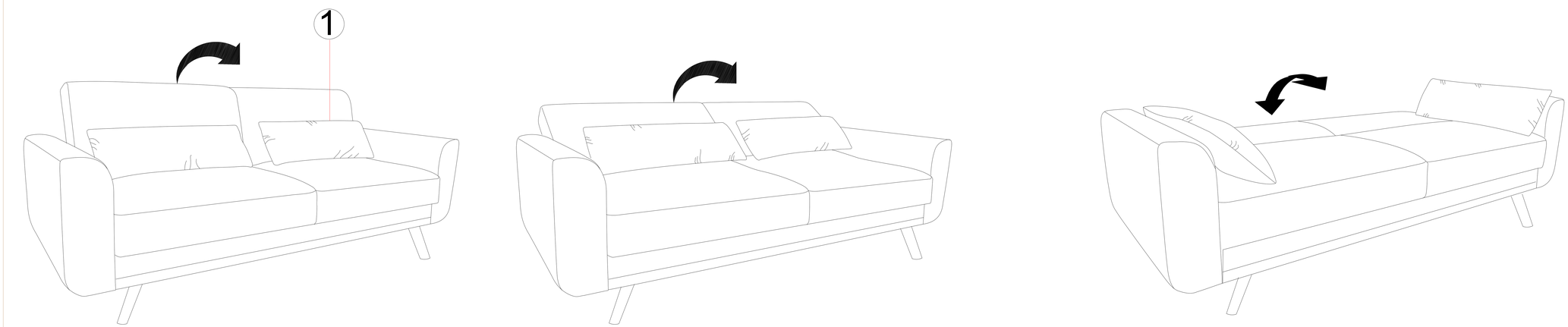
Step 4