ASSEMBLY INSTRUCTION

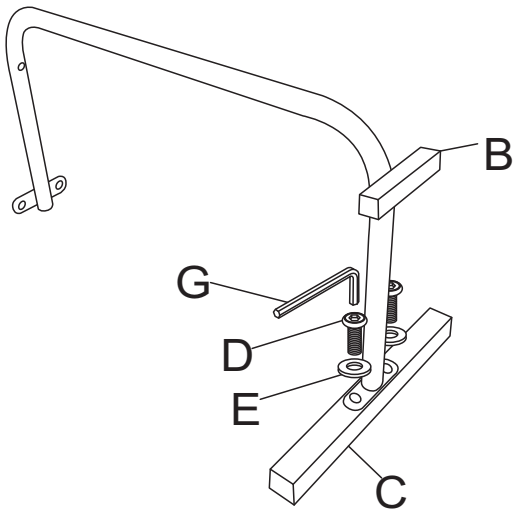

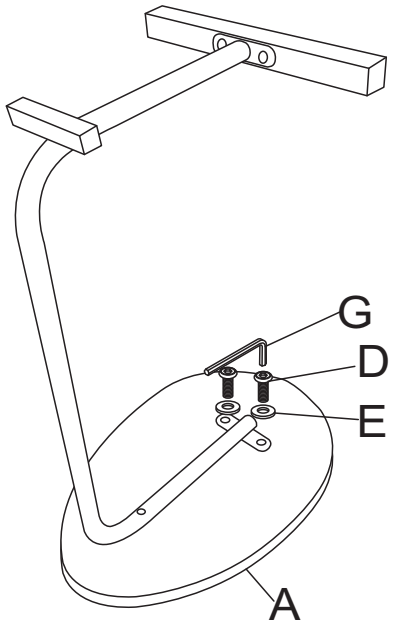

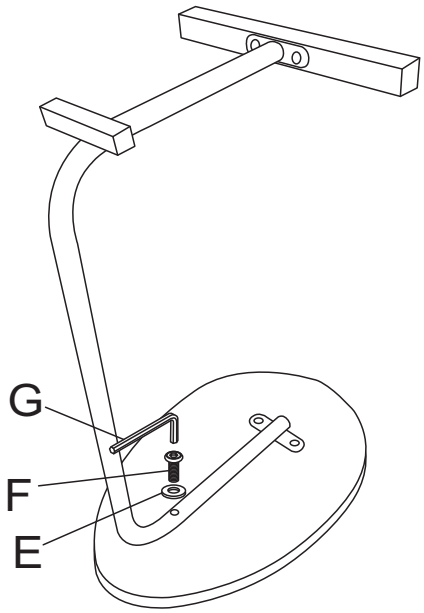

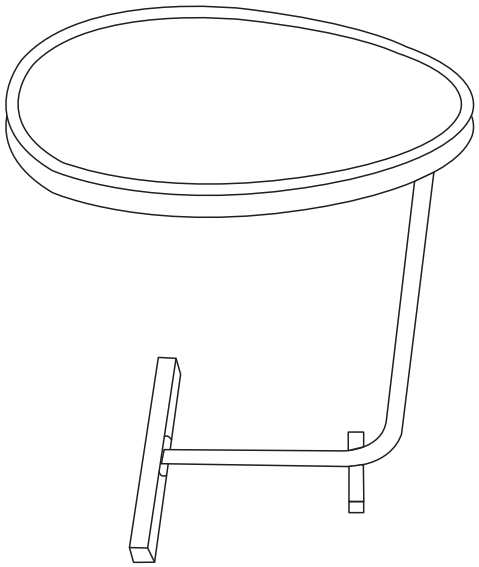

A	B	C	D	E	F	G
	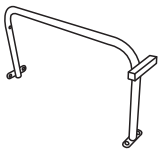	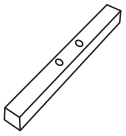			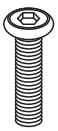	
X1	X1	X1	X4	X5	X1	X1